ASCENSION PROTEGE
WHEELCHAIR LIFT
5442F MODEL SERIES

PRODUCT MANUAL

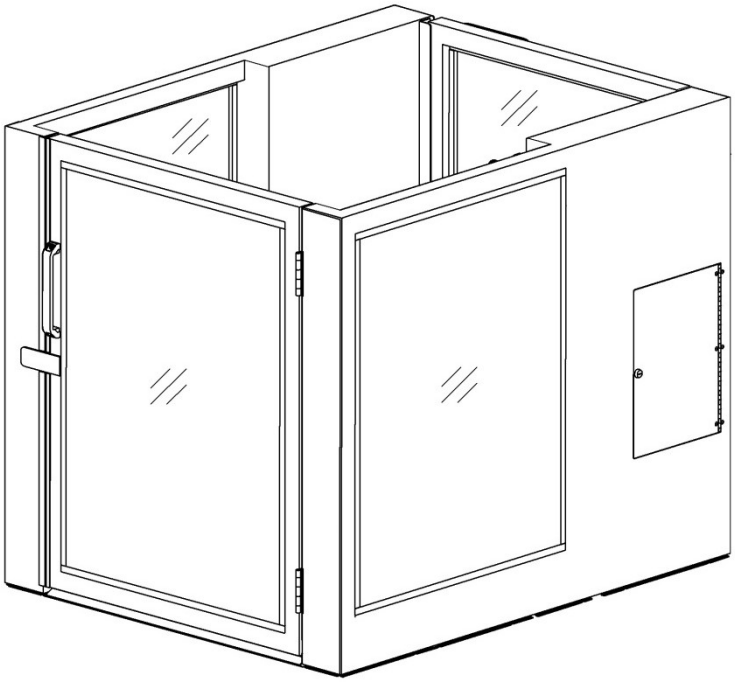

Patented – see ascension-lift.com/patents

ASCENSION®
A DIVISION OF AGM

ASCENSION PROTEGE
WHEELCHAIR LIFT
5442F MODEL SERIES

PRODUCT MANUAL

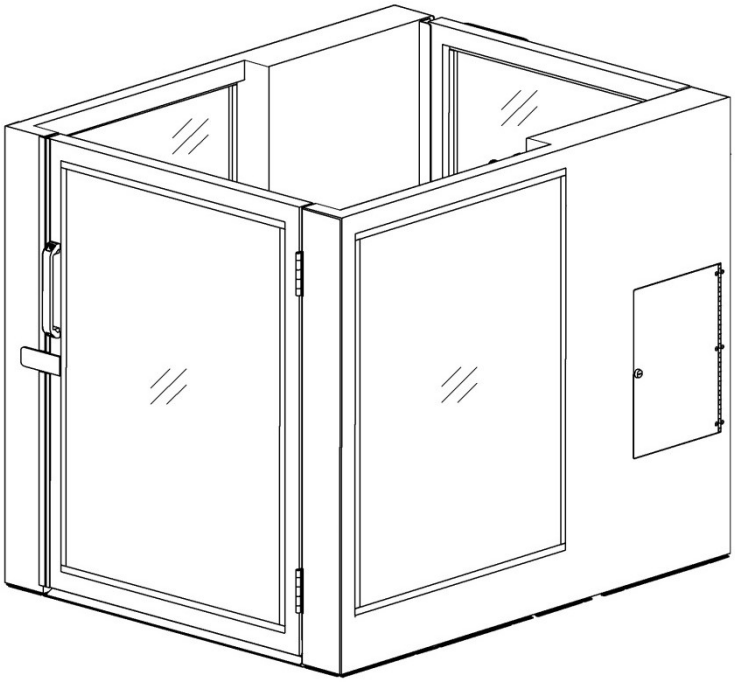

ASCENSION®
A DIVISION OF AGM

TABLE OF CONTENTS

INTRODUCTION

This manual, along with the *Installation Guide*, is to be retained by the lift installer.

The purpose of this manual is to provide the necessary information to perform maintenance and repairs on the Ascension PROTEGE wheelchair lift. This manual is intended to be used by skilled technicians who have experience working on electro-mechanical systems and devices. Furthermore, these personnel should be well-versed in standard industrial safety practices and procedures. The appropriate sections should be read through completely before any repairs are begun.

About This Manual

This manual is divided into six sections:

Section 1 contains general information and definition of terms that are used throughout the remainder of this manual.

Section 2 covers operation of the lift.

Section 3 describes routine maintenance to be performed on the lift.

Section 4 covers mechanical repair. This includes component replacement, as well as detailed procedures to disassemble, test, and reassemble major components.

Section 5 covers electrical testing.

Section 6 is a troubleshooting guide. It provides information for locating and correcting any problems with the lift.

Additional Information

Refer to the *Owner's Manual* for instructions on routine maintenance and manual operation, and for general safety precautions. Refer to the *Installation Guide* for instructions on installing the lift. Refer to the detailed electrical schematic that was included with the lift to perform additional electrical troubleshooting beyond what is covered in this manual.

Getting Help

If you have a question or problem with the lift, please try to find the solution in this manual. In particular, be sure to review the troubleshooting guide in Section 6. If you are not able to resolve the problem, please contact Ascension as indicated below, making sure that you have the serial number of your lift ready. The serial number can be found on the data plate located inside the platform on the upper right rail. Also, it is recommended that you contact Ascension while in the immediate vicinity of your lift, as this will reduce the time required to properly diagnose the problem.

Contacting Ascension

Ascension's business hours are 8 a.m. to 5 p.m. Mountain Standard Time, Monday through Friday.

Telephone:	800-459-0400	Mailing Address:	Ascension
Fax:	520-881-4983		Customer Service
Email:	sales@ascension-lift.com		PO Box 40020
Website:	ascension-lift.com		Tucson, AZ 85717-0020

SECTION 1 General

1.1 Product Information

Operational

- VERTICAL TRAVEL DISTANCE: 4" to 42"
- OCCUPANCY: 1 person
- MAXIMUM PASSENGER LOAD: 900 pounds[1]
- AVERAGE SPEED: 5 feet per minute

Physical

• INTERIOR DIMENSIONS:	36" wide x 48" high x 54" long (5442F model series)
	36" wide x 48" high x 58" long (5442FG model series)
• MATERIALS:	Platform, base frame, lifting device: Mild steel
	Platform sheet metal, safety pans: Aluminum alloy
	Windows: High impact strength clear thermoplastic
• FINISH:	Platform: Powder coat
	Lift base: Galvanized steel
• ELECTRICAL:	120 VAC, 60 Hz, Single Phase, 13 Amps

[1] 900 pounds where allowed by code, 750 pounds otherwise. See lift data plate for actual ratings.

1.2 Terminology

To effectively use this manual, you need to be familiar with the following terms. Refer to the figure on the following page for identification of components. Not all components are shown in the figure.

Access Panel The hinged panels (four total) that provide access to the machinery cabinets.

Back End The end of the lift where the upper platform gate is located.

Base The steel frame that rests on the floor when the casters are removed and supports the operating mechanism.

Control Panel The electrical panel for the lift which contains the power supply, control system relay, and the main power relay. The control panel is located inside the right-hand machinery cabinet.

Dock Plate The hinged plate that bridges the gap between the platform floor and the upper landing surface when the platform is at the upper landing.

Front End The end of the lift where the lower platform gate is located.

Lower Platform Gate The gate that serves the lower landing (ground level).

Machinery Cabinet The enclosures in which the lifting and control mechanisms are located. There is one (1) cabinet on each side of the lift. The contents of the machinery cabinets are accessible through the access panels.

Operating Stations The controls for raising and lowering the platform. The operating station inside the platform has an emergency stop switch. The operating stations outside the platform may be remotely mounted.

Platform The compartment in which the passenger rides.

Skins The sheet metal panels that enclose the operating machinery in the platform.

Upper Landing The stage, platform, or riser that the lift serves.

Upper Platform Gate The gate that serves the upper landing, or stage. The lift may have an upper landing gate mounted to the upper landing sill that replaces the upper platform gate.

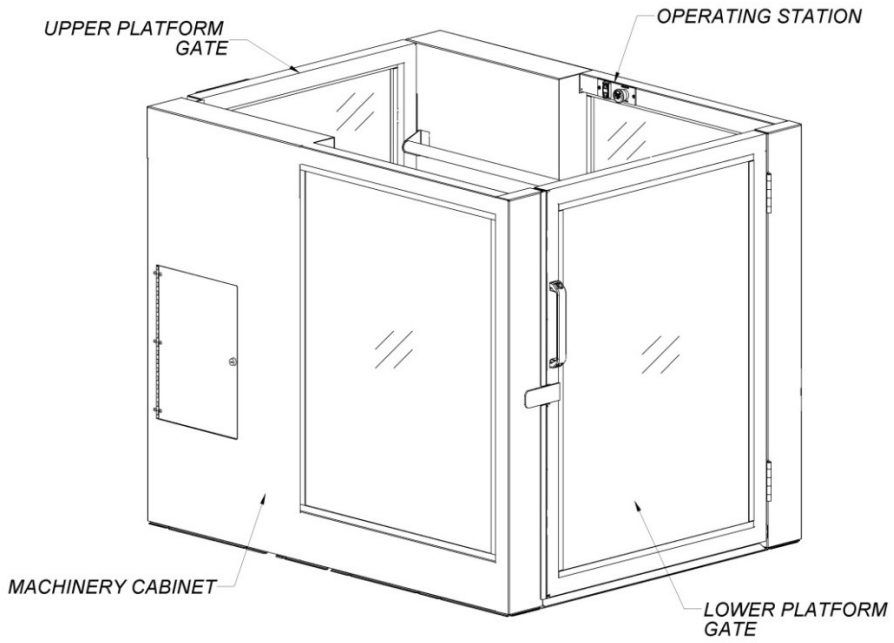

1.3 Important Safety Information

When using the lift, the following basic safety precautions and practices *must* be observed:

- Read and understand all of the information contained in this manual.
- Do not overload the lift. The lifting capacity is stated on the lift's data plate.
- Operate the lift only as described in Section 2 of this manual.
- Use the lift for movement of people only.
- Always close and lock all access panels and remove all keys before leaving the lift unattended.
- Do not expose any part of the lift to a direct liquid stream or spray, such as a water hose. This could create an electrical shock or fire hazard.
- Do not operate the lift in the presence of combustible or explosive gas or fumes. The electrical components of the lift could cause ignition of these chemicals.

1.4 Description of Operation

Two hydraulic cylinders raise and lower the platform. When the "Up" circuit is energized, an electric motor operates a hydraulic pump which provides pressurized hydraulic fluid to the cylinders, causing the cylinder rods to extend and raise the platform. When the "Down" circuit is energized, a hydraulic valve is shifted so that the fluid flows in the opposite direction through the hydraulic circuit and the platform is lowered.

A gate at each end of the lift permits passengers to enter and leave the platform. The lower platform gate will open only when the platform is lowered all the way. The upper platform gate can be fully opened only when the platform is at the upper landing. Both gates are self-closing.

The motion of the platform is controlled by any of the three (3) operating switches located either in the platform or remotely mounted. These are constant-pressure type switches, so that when a switch is released the platform stops. It takes approximately 40 seconds for the platform to move through its full range of 42 inches. These switches are interlocked so that while a switch is activated, pressing another switch in the opposite direction will not cause the lift to stop; the original action will continue.

The lift is equipped with an under-platform safety pan that will halt all downward motion of the platform if it encounters an obstruction as it descends. If this occurs, the platform can be operated upward to allow for the removal of the obstruction. The under-platform safety pan completely covers the bottom and side edges of the platform.

The lift is equipped with a hand pump that can be used to raise or lower the platform in an emergency, or when the casters are being put under the platform and power is not available. The hand pump is located in the right-hand machinery cabinet.

The electrical control panel is located inside the right-hand machinery cabinet. This panel includes the power supply, control system relay, and main power relay.

SECTION 2 Operation

2.1 Standard Operation

- Both gates must be closed for the lift to operate.
- On/Off switch in right machinery cabinet must be set to ‘ON’ for lift to operate. This switch may be set to “OFF” to prevent unwanted movement of lift.
- Move the platform by using any of the three (3) operating switches. The operating switches must be held with constant pressure until the platform stops at the upper or lower landing. Releasing a switch will immediately stop the platform.
- Push the emergency stop button to activate it. Push again to deactivate.
- If the platform is at the lower landing and the lower landing gate interlock prevents the gate from being opened, hold an operating switch "Down" to disengage the interlock.
- The under-platform safety pan will halt all downward motion if it encounters an obstruction as it descends. If this occurs, the platform can be operated upward to allow removal of the obstruction.

2.2 Manual Operation

The hydraulic hand pump can be used to move the platform manually when facility power is unavailable. It may be operated from either the inner or the outer access panel of the right-hand machinery cabinet.

Instructions for use:

1. Locate the 12" long hand pump handle stored just inside the outer access panel on the right-hand machinery cabinet and remove it from its bracket.
2. Swivel the pump linkage outward and then insert the hand pump handle into it.

> ***⚠ WARNING!***
> ***Only use the handle provided with the pump. If this handle does not provide enough leverage to move the platform, immediately stop pumping and contact a repair technician.***

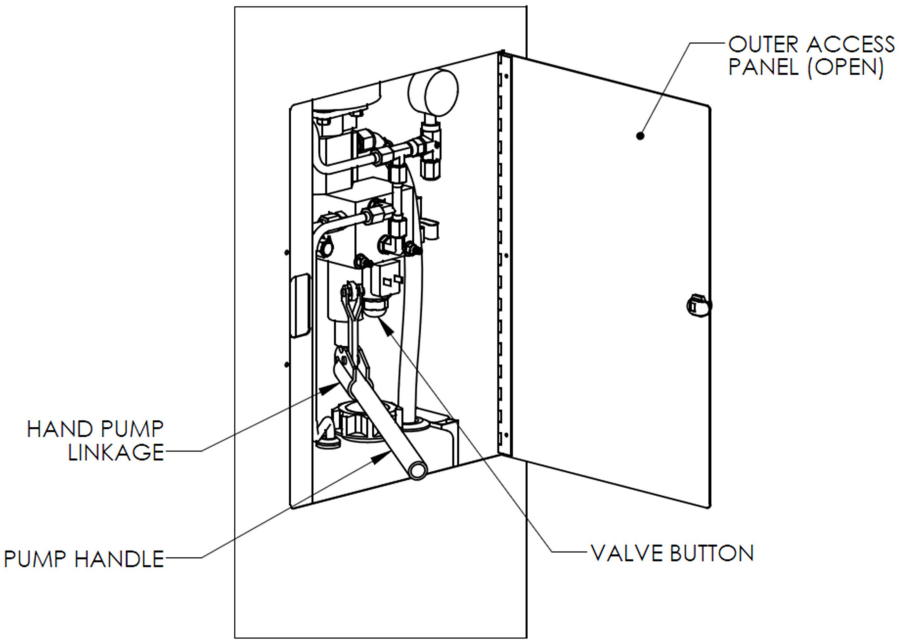

Figure 2

3. To move the platform upward, pump the handle. Please note that the hydraulic power unit is attached with flexible mounts to minimize noise and vibration, and that it is normal for the unit to move around significantly when pumped by hand.
4. To move the platform downward, pump the handle while depressing the black valve button located beside the hand pump.

SECTION 3 Routine Maintenance

The owning facility is responsible for the proper maintenance of the lift. The following checks must be performed every six (6) months:

1. Verify the operation of the lift per Section 2.
2. Verify that the platform will not operate with either gate open.
3. Verify that the emergency stop switch halts the movement of the platform.
4. Verify that the lower platform gate interlock engages before the platform has moved more than 2" from the lower landing. For lifts that include the optional upper landing gate, verify that the upper landing gate interlock engages before the platform has moved more than 2" from the upper landing.
5. Verify that pushing upward on the under-platform safety pan halts the downward movement of the platform.
6. Verify that the hydraulic fluid in the reservoir (inside the right, outside access panel) is between the minimum and maximum levels when the platform is at the lower landing. If you need to add hydraulic fluid to the lift, use an ISO 32 grade hydraulic oil such as Texaco Rando HD32 or 76 Unax AW32 filtered to 10 microns for lifts installed indoors. For outdoor lifts use a low-temperature ISO 15 grade hydraulic oil. In order to add fluid to the reservoir, remove the reservoir cap located just above the min-max marks on the reservoir and use a funnel and rubber hose to add the hydraulic fluid.

SECTION 4 Mechanical Disassembly and Repair

4.1 Important Preliminary Information

The repairs in this section are to be performed by a skilled technician who has experience working on electro-mechanical systems. Furthermore, the technician should be well-versed in standard industrial safety practices and procedures. In the United States of America, electrical safety procedures are established in OSHA's *Lockout/Tagout – Hazardous Energy Sources Standard* (29 CFR 1910.147).

Familiarity with the setup and operation of the lift is required to effectively perform the repairs listed in this section. This information can be found in the *Owner's Manual* provided with the lift.

4.2 Electrically Isolating the Lift

To electrically isolate the lift, use the electrical disconnect installed with the lift.

4.3 Removing the Sheet Metal Skins

For some of the repairs described in this manual, it is necessary to gain access to the inner components of the lift beyond what is possible with the sheet metal "skins" still on the lift. The figure below shows the skins and their positions.

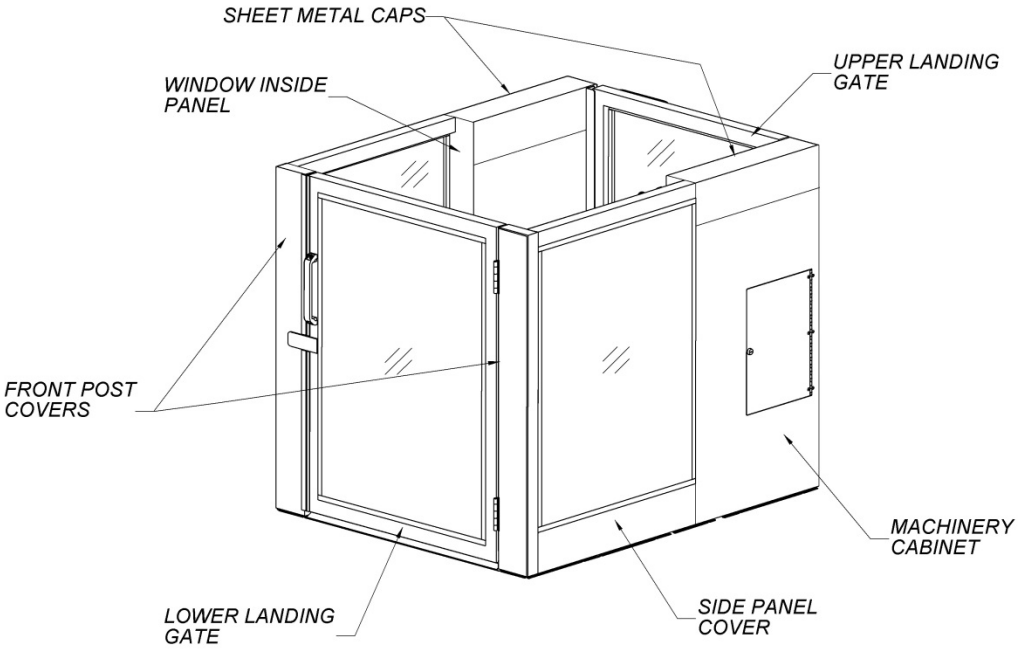

All of the skins are attached to the frame with screws that can be removed with a Phillips screwdriver. In addition, it may be necessary to first remove the grab bar or a window before removing some of the skins. To remove the grab bar, remove the Phillips head screws that secure it to the lift. To remove a window, refer to Section 4.11.

4.4 Operating Station

The operating stations house the UP/DOWN rocker switches and, on the station inside the platform, the emergency stop button. To test or remove either of these switches, use a Phillips screwdriver to remove the two (2) screws that secure the switch plate to the platform and pull the plate away from the platform. A standard multi-meter can be used to test the switches.

To remove the rocker switch, depress the mounting tabs and push the switch out of its mounting cutout.

To remove the emergency stop button, use the release lever on the contact block to disengage the block from the back of the operator then pull it off. Remove the mounting nut to free the operator from the switch plate.

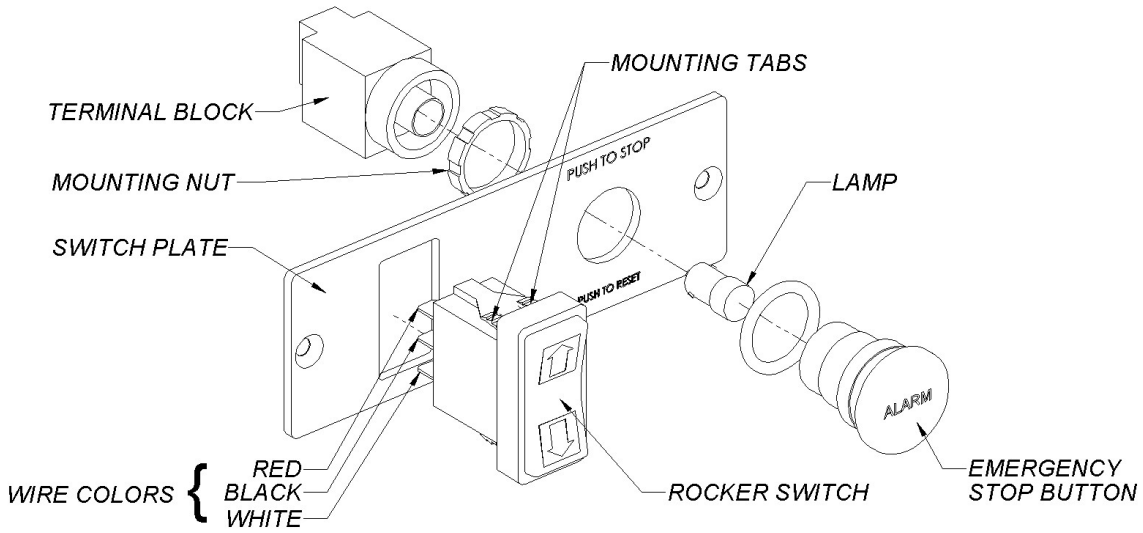

LIFT CAR OPERATING STATION SHOWN

4.5 On/Off Switch

The On/Off rocker switch may be set to 'OFF' to prevent operation of the lift at the owner's discretion. The lift will only operate when the switch is set to 'ON.'

The On/Off rocker switch is located in the right side machinery cabinet across from the motor. To remove it, remove the (2) screws fastening the sheet metal switch mounting bracket to the lift frame and snap the switch out of the bracket.

4.6 Upper Stop Sensor

The upper stop sensor sets the height at which the platform stops at the upper landing. This section describes the procedures for adjusting the upper stop sensor in the case that it has come out of adjustment. If you are only looking for instructions on setting up the lift to stop at the correct height, refer to the *Installation Guide*.

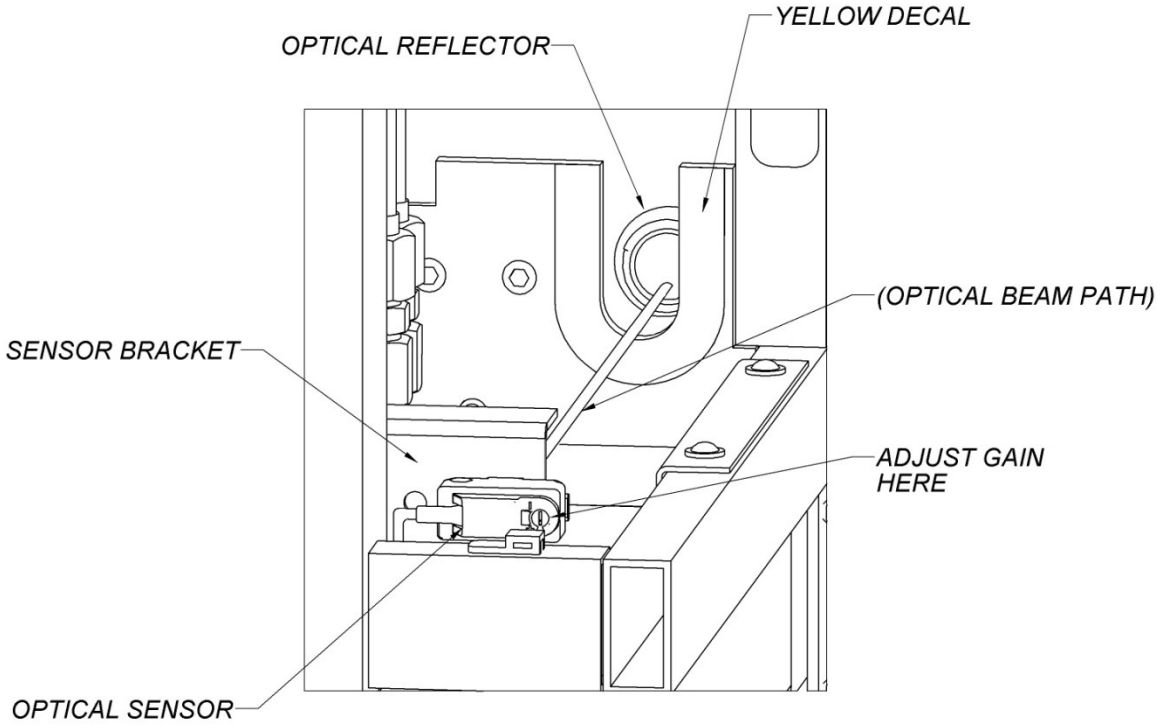

INSIDE OF LEFT MACHINERY CABINET

The optical beam must always pass through the area marked with the yellow decal, shown in the figure above. The following procedure can be used if the optical sensor is misaligned:

1. Remove the outer left sheet metal skin to gain access to the height sensor.
2. To adjust vertical alignment, loosen the two (2) screws holding the sensor bracket to the frame and shift the sensor bracket until the beam passes through the area marked with the yellow decal.
3. To correct horizontal alignment, gently bend the sensor bracket until the beam passes through the area marked with the yellow decal.

The platform should stop when the optical beam strikes the lower edge of the optical reflector. If the platform does not stop correctly, it may be necessary to adjust the gain on the optical sensor so that the platform stops when the beam strikes the optical reflector. The gain is a small black dial on the back of the sensor (see the figure on the previous page) that can be adjusted with a small standard screwdriver.

4.7 Lower Terminal Switch

The lower terminal switch notifies the platform that it has reached ground level. It is actuated by the right vertical guide rail when the platform is less than 0.5" above the ground, which allows for the lower platform gate to be opened and makes sure the platform stops properly when it reaches the ground.

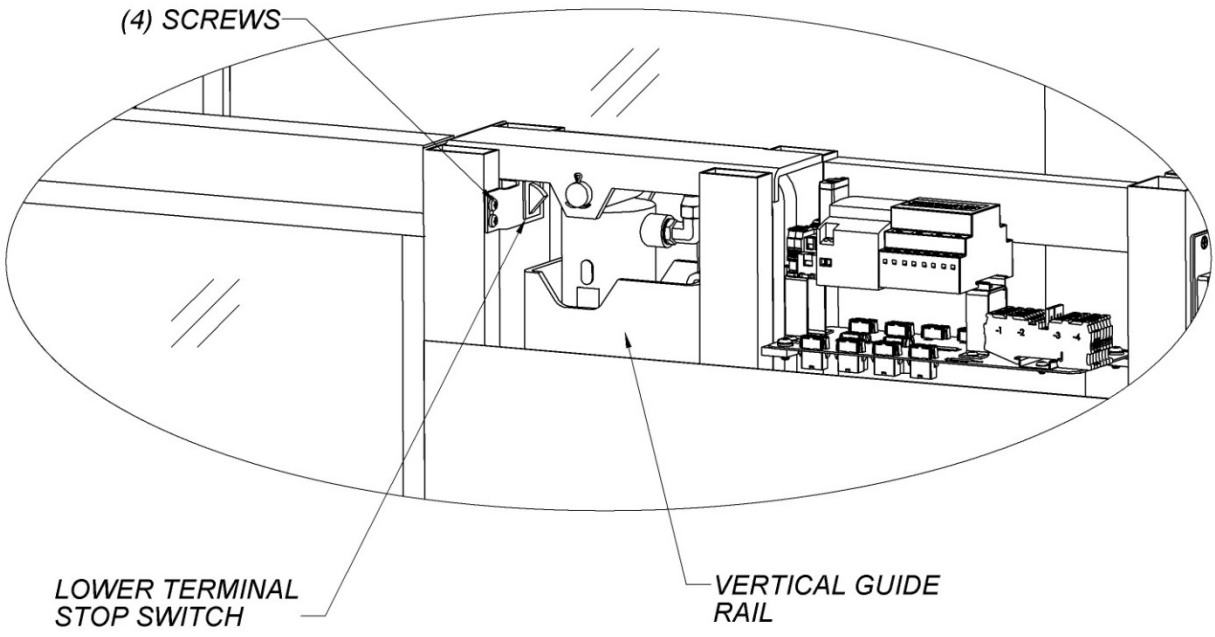

RIGHT SHEET METAL CAP REMOVED

The lower terminal switch can be accessed by removing the right sheet metal cap (see Section 4.3) and is located near the vertical guide rail. To remove the lower terminal switch for testing, use a Phillips screwdriver to remove the two (2) screws holding its bracket to the platform frame. It is of the normally open (NO) type and can be tested with a standard multi-meter.

4.8 Upper Platform Gate Switch

The upper platform gate switch detects whether the upper platform gate is open or closed. The switch is only visible with the machinery cabinet sheet metal skin on the handle side of the gate removed, and is located on the lift frame about 26" from the platform floor. Refer to the figure below. The switch is of the normally open (NO) type and can be tested with a standard multi-meter.

The upper platform gate switch is in correct adjustment if the platform will operate only when the gate is closed. The switch itself can only have its position adjusted by using a Phillips screwdriver to loosen the two (2) screws on the bracket and by sliding it to either side.

To remove the switch, first remove the machinery cabinet sheet metal skin on the handle side of the gate (see Section 4.3). Then, using a 1/16" hex key, remove the two (2) cap screws holding the switch to its bracket. Finally, disconnect the Molex connector at the end of the switch harness.

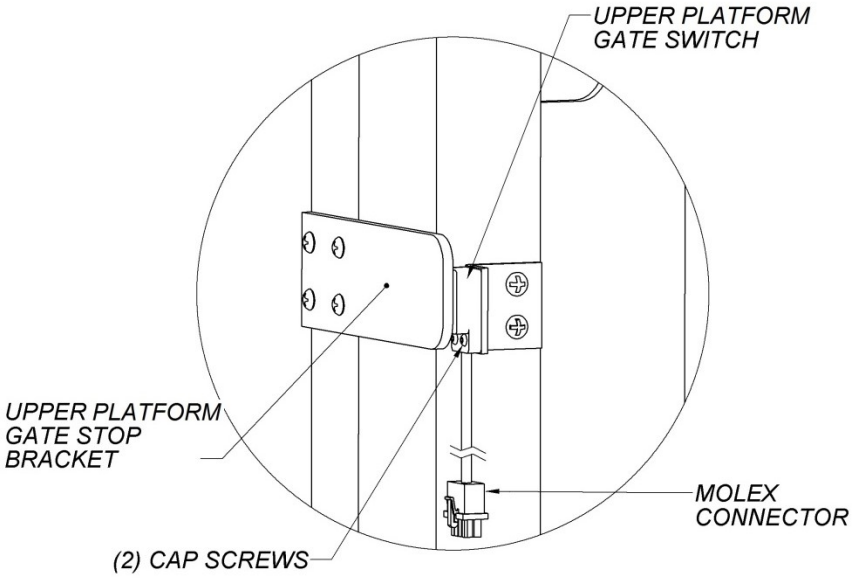

4.9 Gate Interlock Switch

The front (lower landing) gate and optional upper landing gate are each equipped with an interlock switch performs two functions: first, it prevents the lift from operating unless the gate is closed and locked, and second, it prevents the gate from being opened while the lift is in use. The interlock switch is visible only when the post cover on the handle side of the gate is removed. Refer to the figure below for its location (interlock location on upper landing gate is similar).

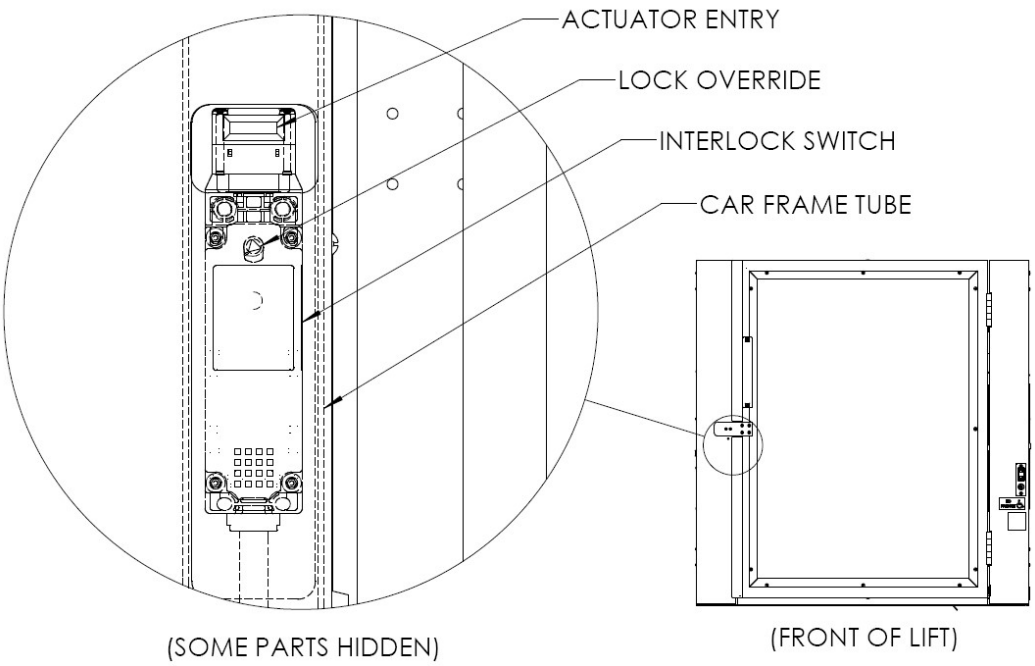

The interlock switch includes a safety circuit that closes only when the gate is closed and locked, as well as a secondary circuit that closes when the gate is closed (regardless of the state of the lock contacts). The locking pin inside the switch is engaged by a spring, and unlocks when the solenoid is energized. The interlock actuator may be inserted even when the solenoid is de-energized.

The solenoid is only energized to unlock the gate when the platform is at the landing. If the platform is at a landing and the gate is locked, press an operating switch ‘UP’ (upper landing) or ‘DOWN’ (lower landing) to unlock the gate.

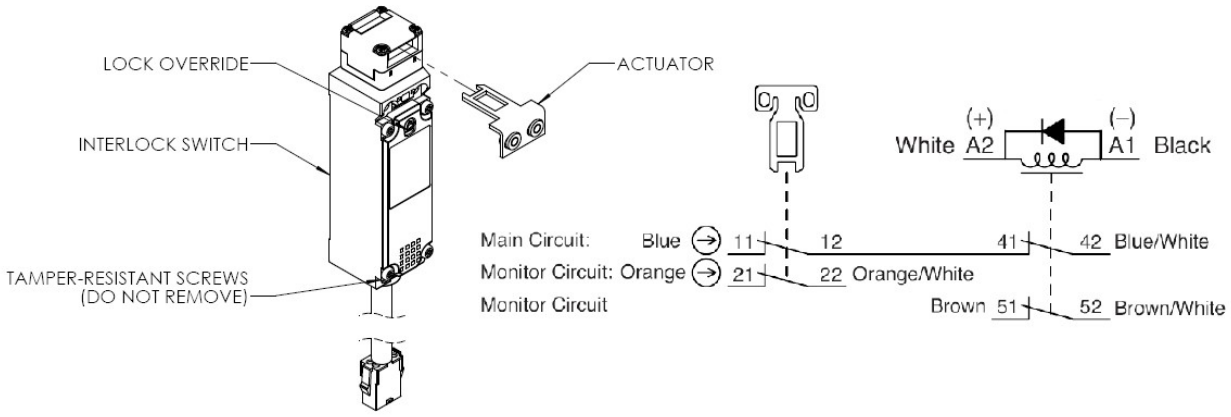

To remove the interlock switch, perform the following steps:

1. Remove the front and rear sheet metal covers on the strike side of the gate.
2. Disconnect the Molex connector that is wired to the interlock switch (front only).
3. Remove the (2) flat head screws fastening the interlock through the back of the frame tube. Take care to ensure that the (2) lock nuts holding the front of the interlock do not drop into the lift frame when the screws are removed.
4. Pull the interlock out of the frame, passing the Molex connector (front lock only) through the cable clearance hole.

To reattach the solenoid, perform the above steps in reverse order.

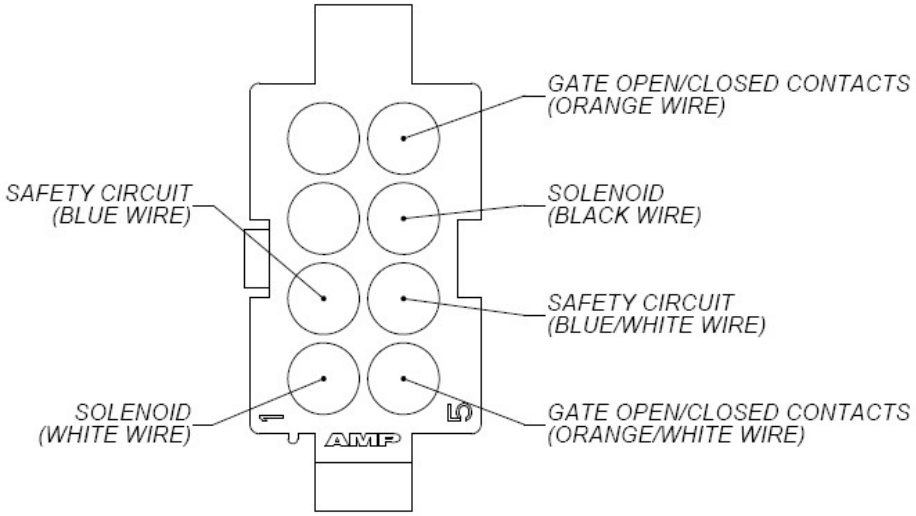

4.10 Hydraulic Valves

The hydraulic valves are located inside the right-hand machinery cabinet. It may be necessary to remove the machinery cabinet skins per Section 4.3 to access some of the valves.

Refer to the following instructions for adjusting or removing any of the four (4) components located in the manifold. It is recommended that you place paper towels below the component to be removed to catch the several ounces of hydraulic fluid that will drip from the manifold as the component is removed. Refer to the figure on the following page for component identification. Please also note that the hydraulic power unit is attached to the lift frame with flexible mounts, and it is normal for it to move around significantly when the hand pump is used.

⚠ *WARNING!*
The platform MUST be either at the lower landing or secured in place before the COUNTERBALANCE VALVE or CHECK VALVE is loosened or removed. Failure to do so could result in the platform dropping and/or high pressure hydraulic oil leaks.

- Counterbalance Valve: If the platform "bounces" as it descends while fully loaded, then the adjustment screw on this valve may need to be tightened. To do so, loosen the lock nut using a 1/2" wrench, turn the adjustment screw clockwise 1/4-turn using a 5/32" hex key, and then retighten the lock nut. Test and repeat as necessary until the "bouncing" has been eliminated. To remove this valve, use a 7/8" wrench. When reinstalling the counterbalance valve, torque it to 18.5-22.0 ft-lbs.
- Check Valve: This valve cannot be adjusted. Use a 7/8" wrench to remove the valve from the manifold. When reinstalling the valve, torque it to 25-30 ft-lbs.
- Directional Valve: This valve cannot be adjusted. This valve can be removed while the platform is not at the lower landing provided that the counterbalance valve is working correctly. However, if the platform starts to descend while you are turning this valve out of the manifold, immediately tighten the valve back into the manifold; the counterbalance valve is malfunctioning and must be replaced (with the platform

at the lower landing). Before removing this valve, pull the electrical harness connectors off of the coil terminals. Then use a 7/8" wrench to remove the valve from the manifold. When reinstalling the directional valve, torque it to 18.5-22.0 ft-lbs.

- Hand Pump: The hand pump cannot be adjusted. The hand pump can be removed while the platform is not at the lower landing provided that the counterbalance valve is working correctly. However, if the platform starts to descend while you are turning the pump out of the manifold, immediately tighten it back into the manifold; the counterbalance valve is malfunctioning and must be replaced (with the platform at the lower landing). Use a 1-1/4" wrench to remove the hand pump from the manifold. When reinstalling the hand pump, torque it to 25-30 ft-lbs.

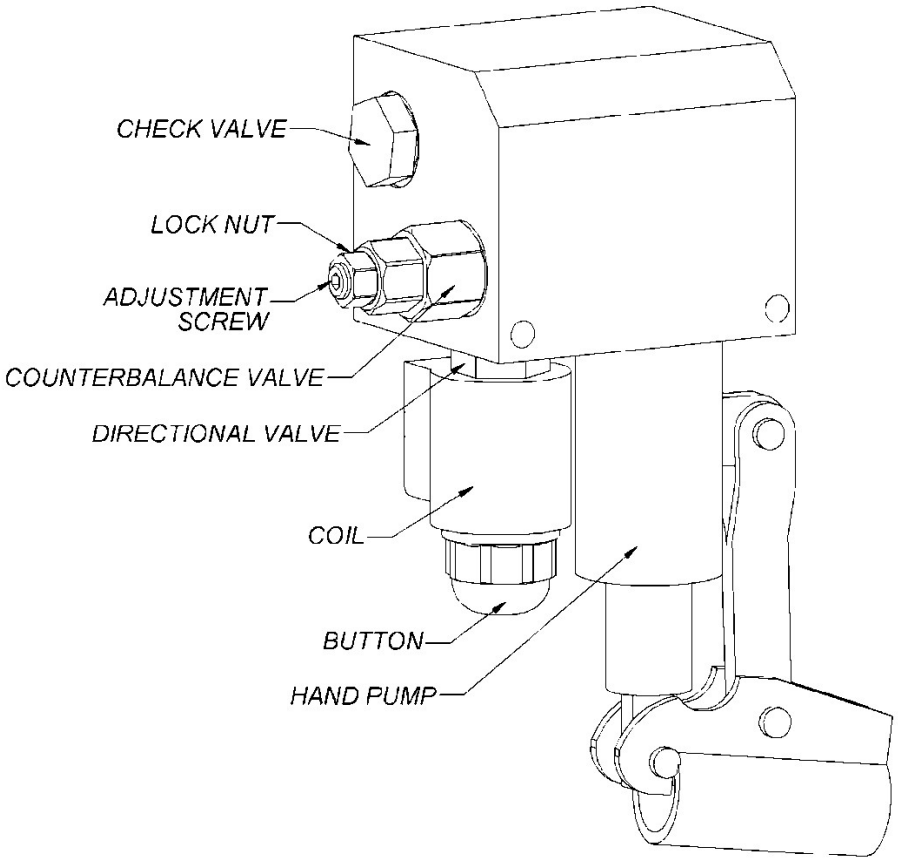

HYDRAULIC MANIFOLD WITH VALVES

4.11 Windows

The windows on the lift are pinched in the channel of a glazing strip which is attached to the lift frame with screws. See the figure below.

To remove a window, remove each of the screws attaching the four glazing strips to the lift's exterior. The window and strips can then be removed as a single unit.

To reinstall a window, position the window assembly in its original installation orientation and reinstall screws. Note that in some locations there may be a gap between the bottom of the glazing strip channel and the lift frame to allow clearance for the fillet welds at the corners of the frame; this is normal.

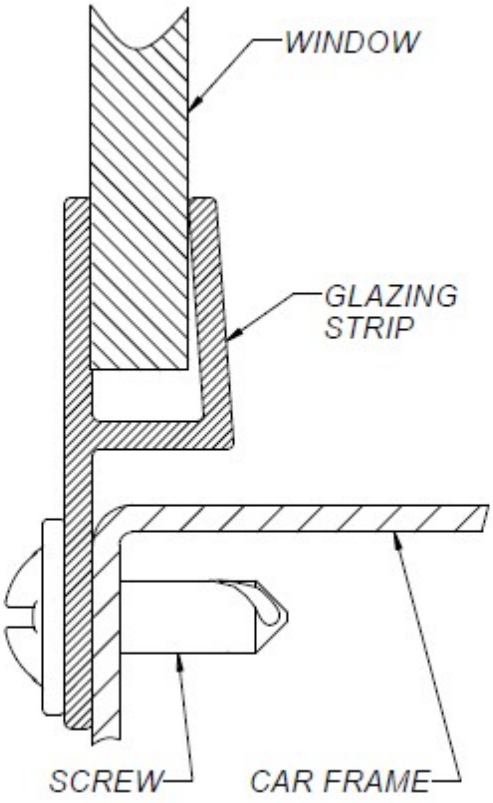

GLAZING SYSTEM CROSS SECTION

4.12 Platform Floor Removal

⚠ *WARNING!*
Use caution when removing the platform floor, as it is large and weighs approximately 80 pounds. It is recommended that two (2) people remove the floor.

The platform floor may need to be removed to service the hydraulic hoses or electrical harnesses running under the platform floor. To remove the platform floor, perform the following procedure. For lifts that do not include an upper platform gate, skip Steps 1 and 2.

1. With the platform at the upper landing, disconnect the tether from the dock plate by using a Phillips screwdriver and 3/8" wrench to remove the two (2) flat head screws and nuts holding the footman's loop to the dock plate.
2. Return the platform to ground level, taking care to make sure the dock plate remains retracted and does not catch on the upper landing surface during the platform's descent.
3. With the platform at ground level, open the lower platform gate and use the gate closer hold-open washer to hold it fully open.
4. Use the hand pump to raise the platform approximately 6" above the ground. For instructions on using the hand pump, refer to section 2.2.
5. Use a Phillips screwdriver (powered recommended) to remove the six (6) flat head screws holding the floor to the platform cross-members.

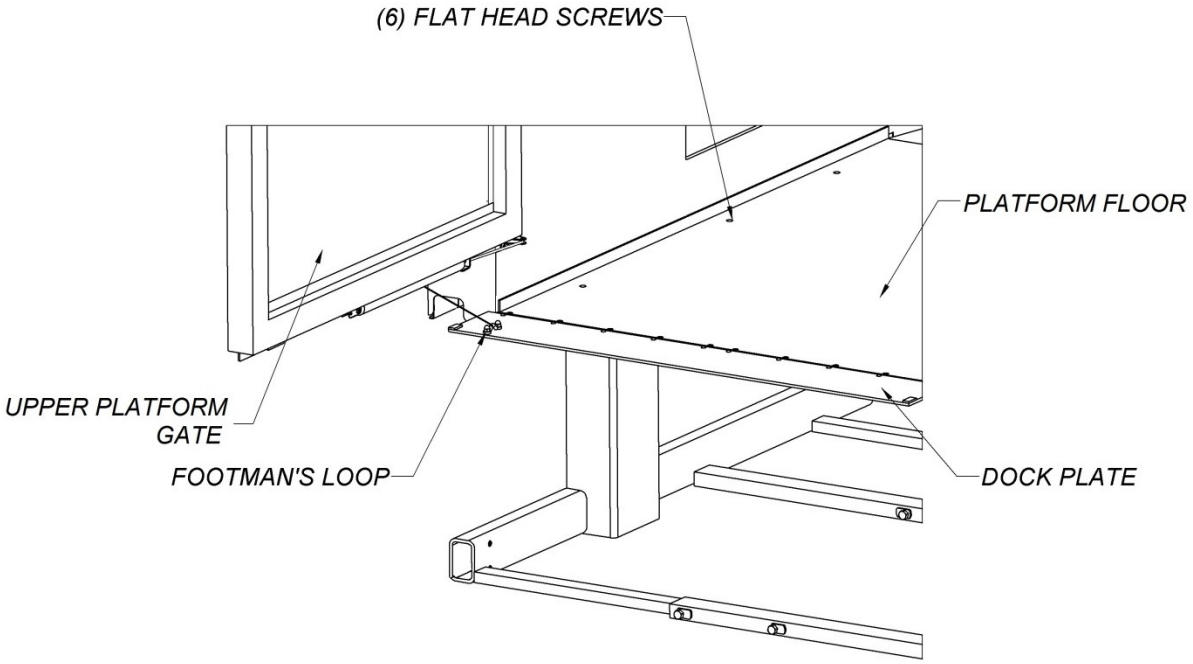

To reinstall the floor, perform the above steps in reverse order.

4.13 Gate Closer Adjustment

The gate closers may need to be adjusted if the gates are closing too quickly or too slowly. When the gate closers are properly adjusted, each gate will close in approximately five (5) seconds.

For the lower platform gate and optional upper landing gate, the closer is located inside of the bottom of the gate. See the figure below for clarification.

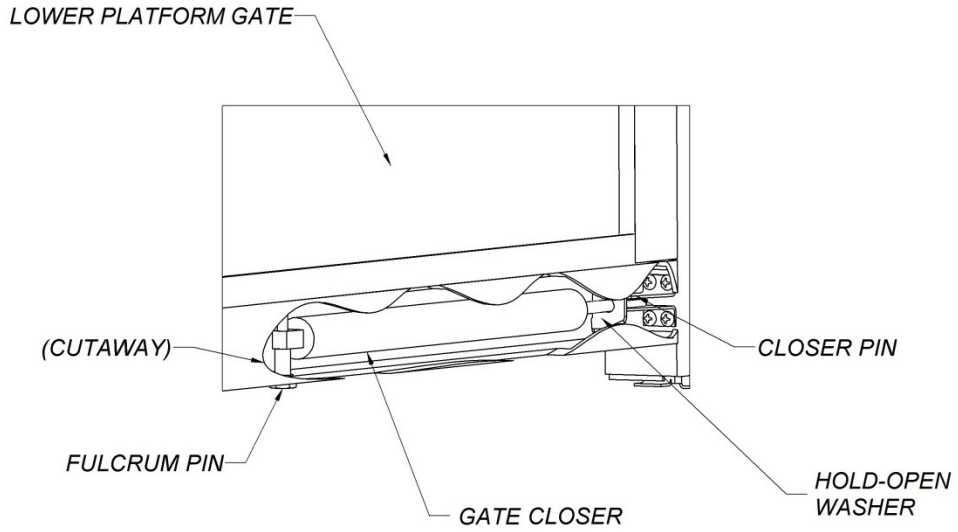

The closer must be removed from inside the gate in order to perform any adjustments. The following procedure can be used to remove and adjust the lower platform gate or upper landing gate closer:

1. Fully open the lower platform gate or upper landing gate and use the gate closer hold-open washer to hold the gate open.
2. Remove the pin securing the gate closer to the closer bracket.
3. Use a 3/16" hex key or a 9/16" wrench to remove the fulcrum pin. Threadlocker was applied to the fulcrum pin threads during manufacture of the lift, so it may be difficult to break the pin loose the first time.
4. Remove the gate closer from the gate.

5. Pull the closer arm until it is fully extended and then allow it to retract fully. In order for the gate to close in five (5) seconds as desired, the closer rod should take approximately seven (7) seconds to fully retract when not attached to the gate. To adjust the closing speed, hold the closer ends stationary and rotate the closer body. Refer to the figure below for the correct direction of rotation.

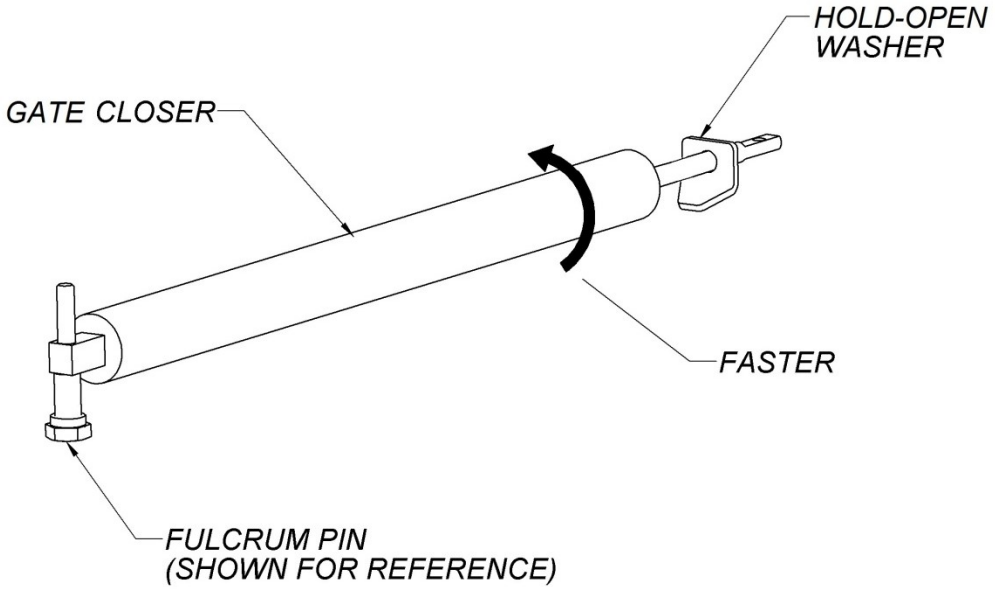

6. Fully extend the closer arm and lock it into place with the hold-open washer.
7. Reattach the gate closer to the lift using the fulcrum pin and the closer pin. Then move the hold-open washer to allow the gate to fully close. Use the short leg of the 3/16" hex key used in Step 3 to pull the washer out of the gate tube.

For lifts that include an upper platform gate, there are two (2) gate closers: a hydraulic closer and a chain closer. The hydraulic closer is located on the bottom of the upper platform gate. It can be adjusted by rotating the closer body. Refer to the figure on the following page for the correct direction of rotation.

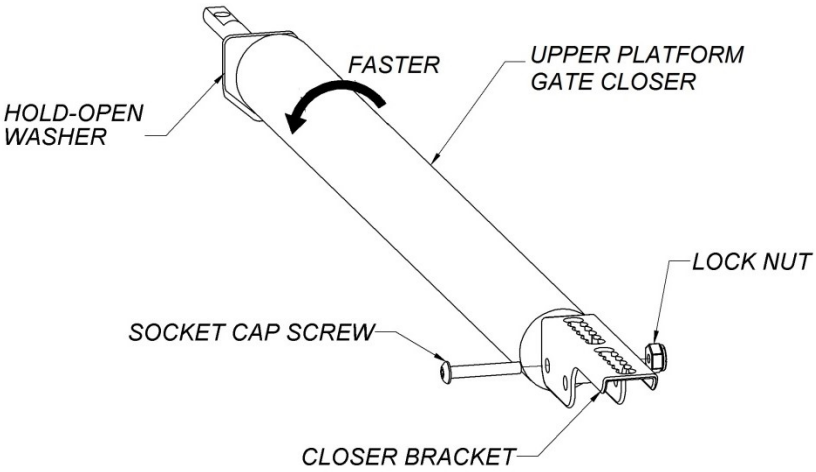

The chain closer is located inside of the bottom of the upper platform gate. The chain passes between the gate and the frame, with at least one (1) link of the chain closer held in the chain closer bracket as shown in the figure below.

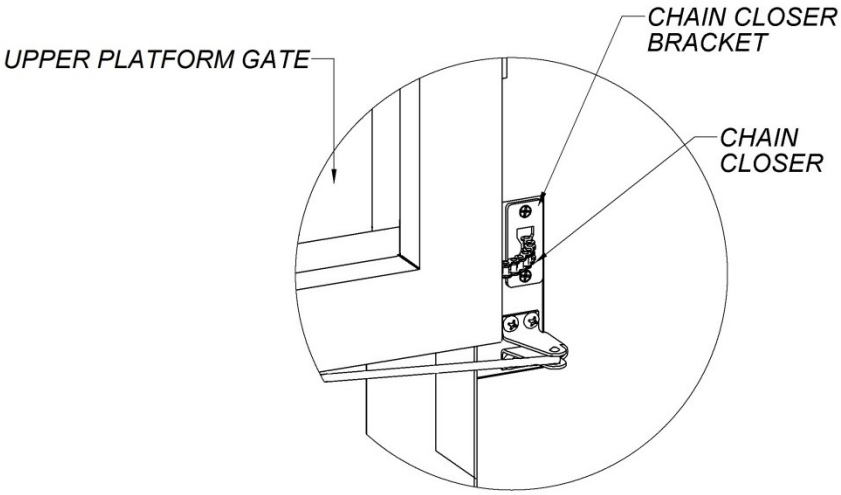

It is not recommended to adjust the chain closer. To remove the chain closer, perform the following procedure:

1. Open the upper platform gate approximately half-way and use the hold-open washer on the hydraulic closer to hold the gate open.
2. Using a small screwdriver or similar tool, pin the chain near where it exits the bottom of the upper platform gate to prevent it from retracting into the gate.

3. Move the hold-open washer on the hydraulic closer to allow the gate to close slightly, taking all weight off the chain closer.
4. Push the chain upward until the chain moves to the larger portion of the key slot on the chain closer bracket.
5. Open the gate slightly until the chain comes free from the bracket.
6. Exit the platform and fully open the upper platform gate and use the hold-open washer on the hydraulic closer to hold the gate open.
7. Using a Phillips screwdriver, remove the two (2) screws holding the chain closer to the upper platform gate. The chain closer can now be removed from inside of the bottom of the gate.

> ⚠ ***WARNING!***
> ***Use caution when removing the tool used to pin the chain. Once the tool is removed, the chain will rapidly retract into the closer with a large amount of force.***

To reinstall the chain closer, reverse the above procedure.

4.14 Safety Pan Switches

The safety pan assembly is in place to make sure that the area under the platform is clear of obstructions while the platform is descending. The safety pan consists of four (4) main components: the front safety pan, the rear safety pan, and two (2) safety pan bridges.

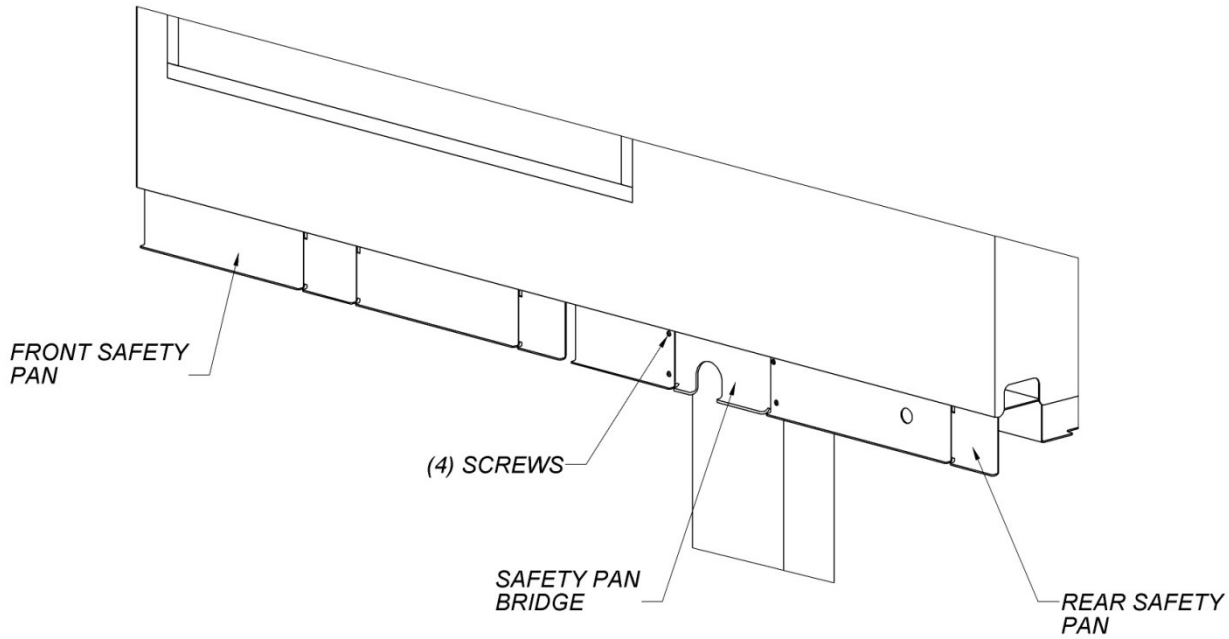

There are eight (8) normally closed (NC) switches that monitor the safety pan. The normally closed (NC) terminals monitor when the safety pan has struck an obstruction. When functioning properly, the switches are actuated only when the safety pan has run into an obstruction, which stops all downward motion of the platform. The single exception to this is when the platform is within approximately a 1/2" of the ground, in which case the switches are turned off so that the platform can fully descend to the ground.

The normally open (NO) terminals on the safety pan switches serve as a verification of the safety pan circuit that makes sure each switch is functioning before allowing the lift

to raise more than a 1/2" above the ground. If the verification circuit detects a fault, the platform will stop all upward motion.

The only way to gain access to all of the safety pan switches is to remove most of the sheet metal skins (see Section 4.3). Each of the switches is attached to a bracket that is attached to the frame (see the figure below). To remove a safety pan switch, disconnect the switch from the safety pan harness and remove the mounting screw holding the safety pan to the bracket. Then use a Phillips screwdriver to remove the two (2) pan head screws holding the bracket to the frame. The bracket and switch can now be removed.

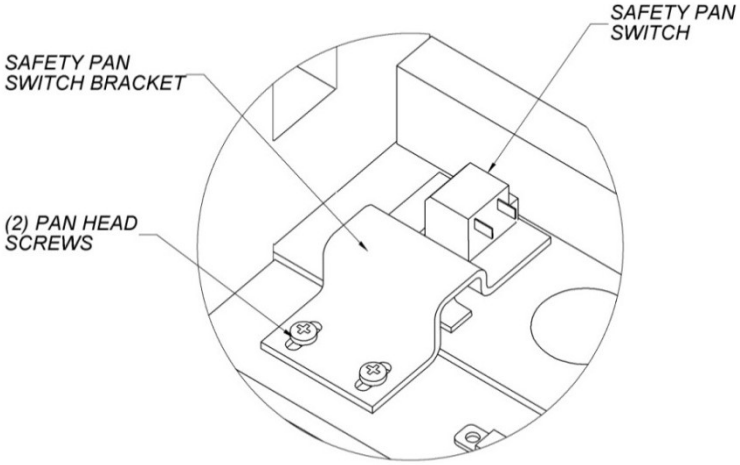

SAFETY PAN SWITCH/BRACKET ORIENTATION
TYPICAL (8) PLACES

4.15 Safety Pan Removal

To remove the safety pan, perform the following procedure:

1. Make sure the platform is at ground level and resting securely on its base.
2. Run the platform up to approximately 36" above the ground. It may be necessary to move the upper height optical reflector if the lift stops before reaching 36". Refer to Section 4.6 if you need instructions on moving the upper height optical reflector.
3. Detach the rear safety pan from the lift by loosening the four (4) hex shoulder mounting screws with a 6" long 1/8" hex key. Each screw is recessed in a 0.5" diameter hole (see the figure on the following page). When all four (4) shoulder screws have been removed, slide the rear safety pan down the guide rails to the floor.

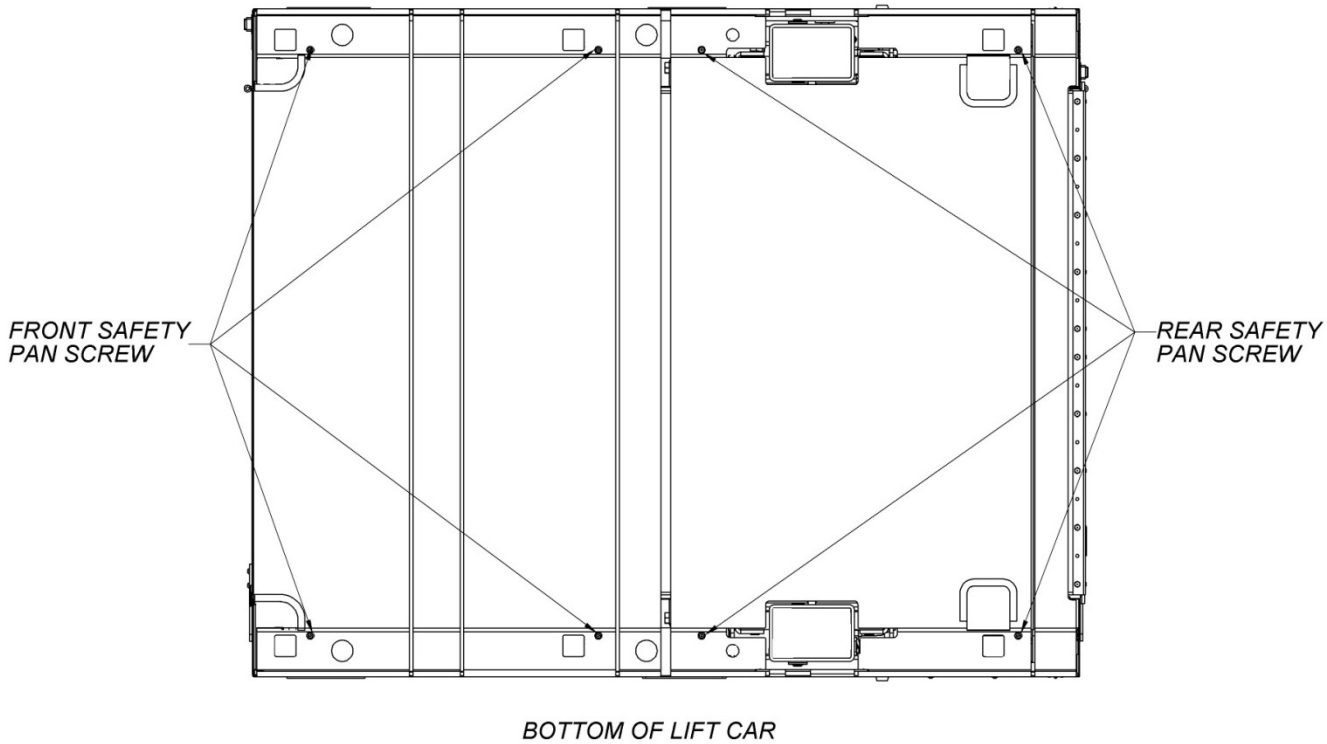

4. Using a Phillips screwdriver, remove the four (4) small screws from each of the two (2) safety pan bridges and lift the rear safety pan out from under the lift. Set the rear safety pan, two (2) bridges, and eight (8) screws aside.

5. Detach the front safety pan from the lift by loosening the four (4) hex shoulder mounting screws using the same hex key used in Step 3. Set the front safety pan aside.

To reattach the safety pan assembly to the platform, reverse the above procedure. After the safety pan has been attached to the platform, confirm that the safety pan slides freely on the shoulder screws. If the safety pan is binding, loosen the shoulder screw that appears to be binding, gently bend the safety pan in the direction that will eliminate the binding, and then retighten the shoulder screw. If this does not solve the problem, you will need to remove cabinet skins and shift the mounting brackets slightly.

SECTION 5 Electrical Testing

This section contains information that will enable a skilled and experienced electrician to service the lift. The electrical and logic diagrams for the lift are shown on the following pages. In addition to the schematics on the following two (2) pages, you may need to refer to the detailed electrical schematic that was provided with the lift in order to service the lift.

⚠ *CAUTION!*

When working on any part of the electrical system, industrial electrical safety practices should be rigorously adhered to, including:

- ***Danger Tags: While repairs are underway, a danger tag must be attached to the disconnect to advise personnel that the lift is being serviced.***
- ***Two-man rule: As a minimum, two (2) people should be present while repairs and tests are being performed.***
- ***Be cognizant as to the electrical status of the lift (i.e., whether it is powered or not). When in doubt as to whether a circuit or component is powered, test it first!***

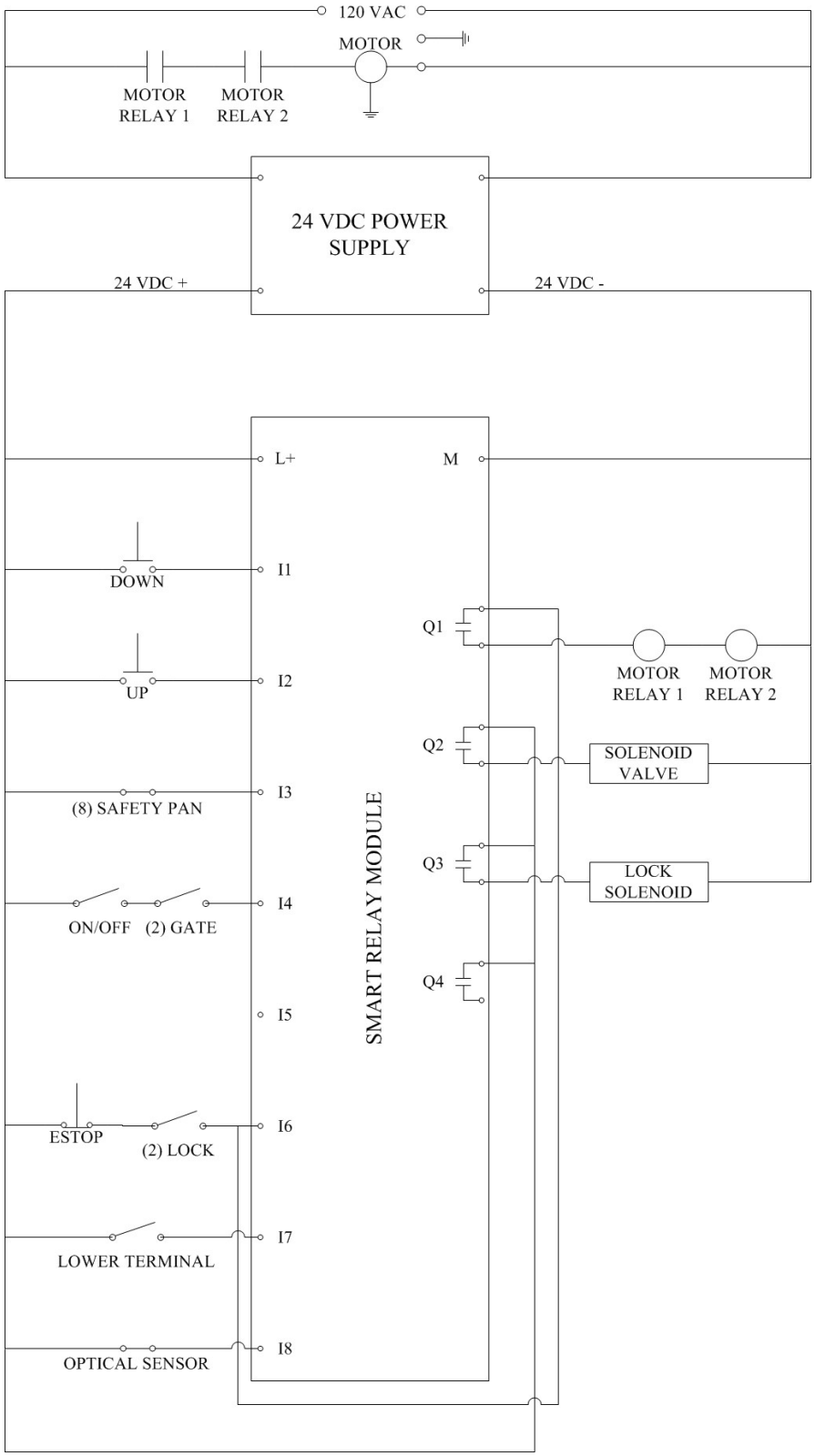

ELECTRICAL DIAGRAM

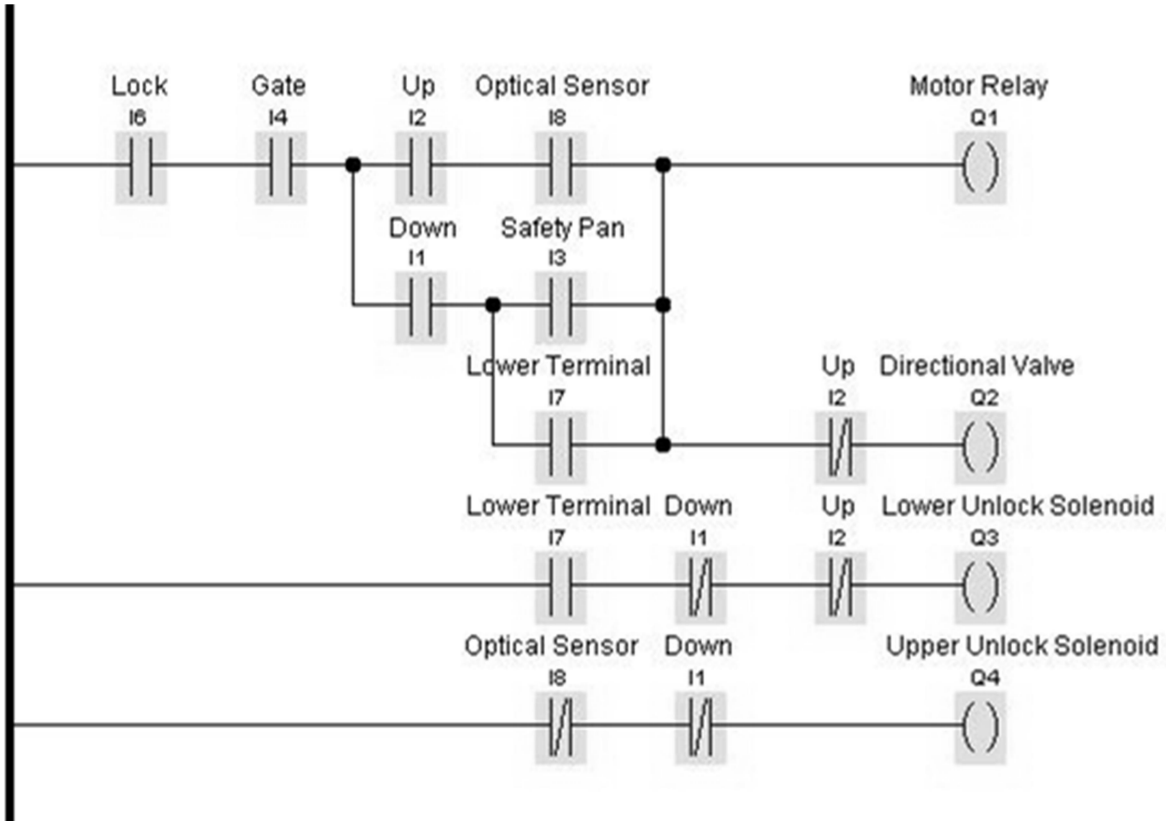

RELAY MODULE LOGIC

Notes:

1. The logic diagram above does not include any of the timers or more complicated components of the logic circuit. Rather, it only shows the contacts that must be maintained for the platform to run up or down.
2. For clarification, the solenoid valve (Q2) is the directional valve on the hydraulic manifold (see Section 4.10), the lock solenoid (Q3) is the lower platform gate locking mechanism (see Section 4.9), and the ULG solenoid (Q4) is the locking mechanism for the optional upper landing gate.

5.1 Access to the Electrical Panel

The electrical panel can be accessed by removing the right sheet metal cap. Refer to Section 4.3.

Refer to the figure below for identification of the major components on the electrical panel.

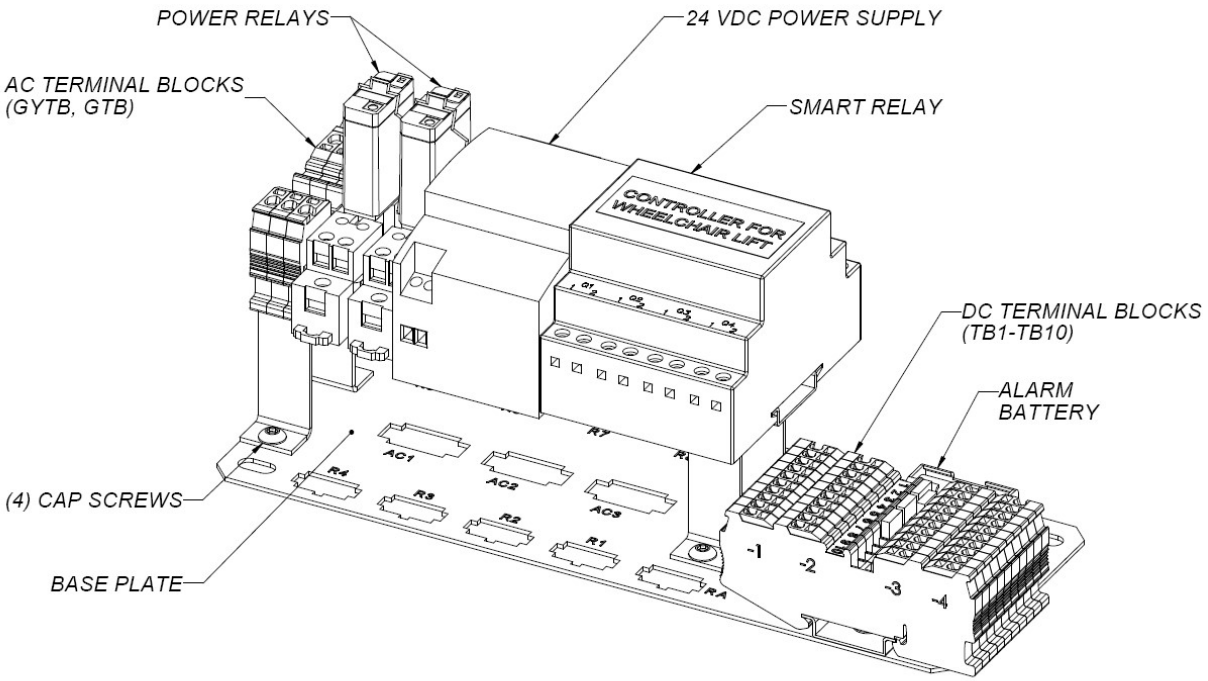

ELECTRICAL PANEL
WIRING HARNESSES AND CONNECTORS NOT SHOWN

5.2 Testing the Switches

Each of the lift's switches can be tested by locating the switch, removing the switch from the lift if necessary, and checking for continuity across the contacts on the back of the switch. See the table below for information on each switch and which section of this manual provides information on accessing the switch.

Switch	Type	Section
Upper Stop Sensor	Retro-reflective Optical Sensor	4.6
Lower Terminal Switch	SPST, NO	4.7
Safety Pan Switches	Push-to-break	4.14
Interlock Switch	SPST, NO	4.9
Emergency Stop Switch	Push-to-break	4.4
Operating Switch	(Mom. On)-Off-(Mom. On)	4.4
ON/OFF Switch	On-Off	4.5

Alternately, most of the lift's switches can be tested at the smart relay, which operates on 24 VDC power. Before performing any checks at the smart relay, verify that the module itself is receiving power (refer to Section 5.3). If the module is receiving power, then the function of the lift's switches can be verified by testing for continuity across the smart relay's contacts as shown in the table below.

Component	Smart Relay Contacts	Circuit is closed when:	Circuit is open when:
Operating Switch	I1-L	Rocker is pushed down	Rocker is at rest or pushed up
	I2-L	Rocker is pushed up	Rocker is at rest or pushed down
Safety Pan Switches	I3-L	Safety pan is not pressed up (unobstructed)	Safety pan is pressed up (obstructed)
Upper/Lower Landing Gate Switches and ON/OFF Switch	I4-L	Both gates are closed and ON/OFF switch is ON	One or both gates open or ON/OFF switch is OFF

Component	Smart Relay Contacts	Circuit is closed when:	Circuit is open when:
Tilt Sensor	I5-L	Lift is on level ground	Lift is out of level
Interlock Switch	I6-L	Interlock is engaged	Interlock is disengaged
Lower Terminal Switch	I7-L	Platform is more than 0.5" off the ground	Platform is less than 0.5" off the ground
Upper Stop Sensor	I8-L	Sensor does not detect reflector (platform is not at the upper landing)	Sensor detects reflector (platform is at the upper landing)

5.3 Testing the Smart Relay

The smart relay is located on the electrical panel. See Section 5.1.

A green light on the smart relay indicates that it is receiving power and is ready for use. Note that the smart relay requires 6-8 seconds to initialize after it receives power during which time the relay light is red. Always give it time to initialize before performing any testing on it.

To test the function of the smart relay, refer to the logic diagram on page 34.

If the smart relay is not receiving power, check for and correct the following conditions as necessary:

1. AC supply to the lift has been shut off.
2. The power supply is not supplying 24 VDC. Refer to Section 5.4 to check it.
3. There has been a wiring harness or connector failure. See the Electrical Diagram on page 33 to continue troubleshooting, or contact Ascension.

5.4 Testing the Power Supply

The power supply is located on the control panel. See Section 5.1. The AC power must be on to conduct the following tests.

If the green LED is illuminated, the unit is supplying 24 VDC. If the LED is not illuminated, check to see that the AC supply is on. If AC power is being supplied, use a multi-meter to check for the voltage drop between a + and a – terminal on the power supply. The potential should be close to 24 VDC.

To detach the power supply from the control panel, pull out on the orange tabs with a flat head screw driver. The power supply can then be removed from the DIN rail.

5.5 Testing the Power Relays

The power relays are located on the outer electrical panel. See Section 5.1.

The AC power must be on to perform the following tests.

Before testing the power relays, the following two conditions must be met:

1. The power relays must be receiving power. To verify this, check for a 120 VAC drop across the "5" contact on the relay closest to the power supply and the "9" contact on the other power relay.
2. The smart relay must be receiving power (see Section 5.3). If it is not, follow the steps listed in Section 5.3 to restore power.

⚠ *CAUTION!*
The following step may cause the platform to rise.

To test the power relay, connect a jumper from the "L+" contact on the smart relay to the "14" contact on the power relay closest to the power supply. If this causes the platform to rise, then the power relays are functional. If it does not, then measure the voltage drop across the same power relay contacts indicated in Step 1 above while jumping from the "L+" contact on the smart relay to the "14" contact on the power relay.

If the voltage drop does not go to approximately 0 VAC, then the power relays are not functioning correctly and either one or both need to be replaced. If the voltage drop does go to approximately 0 VAC but the platform does not move upward, then the motor or motor harness has a fault.

To replace the power relay, electrically isolate the lift according to the procedures in Section 4.2. Then, remove the "ice cube" style relay from its base. The replacement relay will only fit into the relay block in one orientation.

SECTION 6 Troubleshooting

The table below presents the necessary information to perform basic troubleshooting on the lift. The numbers in the Section column refer to sections within this manual. For the sake of completeness, many of the items in this table are of a setup and operational nature and are not specifically addressed in this manual. Please refer to the *Owner's Manual* and/or *Installation Guide* for these items.

Problem	Possible Cause	Remedy	Section
Platform will not elevate or lower when an operating switch is activated	Lift is not receiving power	Check building's supply line to lift	N/A
	Emergency Stop is depressed	Turn it clockwise to reset it	4.4
	One or both gates are open	Close both gates	N/A
	Lower interlock is not engaged	Adjust the lower interlock actuator position	4.9
	Upper platform gate switch is out of adjustment	Adjust the upper platform gate switch position	4.8
	Component failure	Electrical testing and possible component replacement	5.2
	Lift is turned off	Turn the lift on	4.5
Platform will elevate but will not lower	Operating switch failure	Try alternate operating switch; replace switch if necessary	4.4
	Directional valve failure	Replace directional valve	4.10
	Smart relay failure	Electrical testing and possible component replacement	5.3
	Safety pan obstructed	Remove obstruction	N/A
	One or more safety pan switches out of adjustment or failed	Remove safety pan and check each switch	4.14 4.15
Platform will not elevate from ground level	Upper stop sensor is sensing a false beam reflection	Adjust sensor gain with small dial on sensor	4.6
	Upper stop sensor failure	Replace upper stop sensor	4.6
Platform elevates but then stops suddenly	Lower terminal switch out of adjustment	Check the lower terminal switch to make sure it is not stuck or broken	4.7

Problem	Possible Cause	Remedy	Section
Platform does not stop automatically at the upper landing	Upper height stop reflector is positioned incorrectly	Set the upper height stop reflector properly per the *Installation Guide*	N/A
	Upper stop sensor beam path is blocked	Remove blockage	4.6
	Upper stop sensor is out of adjustment	Adjust upper stop sensor	4.6
Motor runs but platform does not elevate	Directional valve is in override position	Return the directional valve to normal position.	2.2
	Hydraulic fluid level is low	Fill hydraulic fluid reservoir	N/A
	Break in hydraulic circuit	Repair break and fill hydraulic fluid reservoir	N/A
	Directional valve stuck open	Replace directional valve	4.10
	Platform is overloaded	Reduce load on platform until load is equal to or less than the rated load	N/A

Notes:

Notes:

Notes:

ASCENSION®

A DIVISION OF AGM

Printed in the U.S.A. 113510 REV D